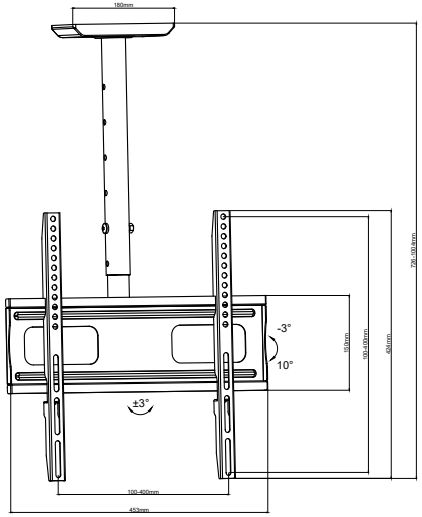
180mm
726-1000mm
-3°
10°
50mm
100-100mm
60mm
±3°
100-400mm
453mm

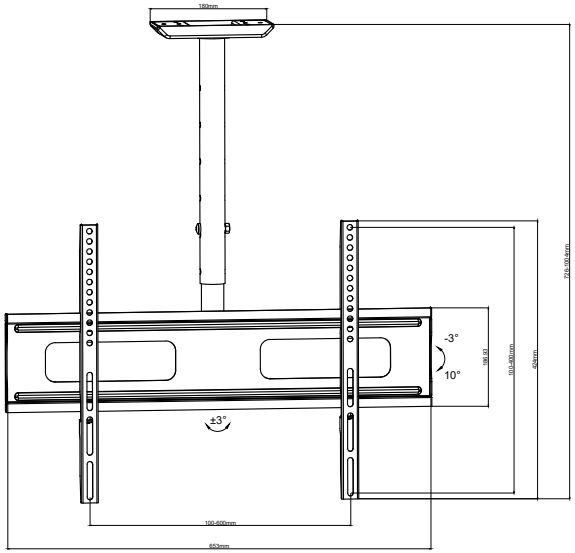
180mm
726-1000mm
-3°
10°
100-80
100-400mm
60mm
±3°
100-600mm
653mm

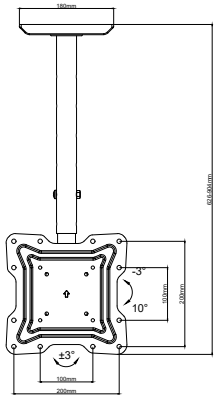
180mm
600-800mm
-3°
10°
50mm
200mm
±3°
100mm
200mm