Grounding	
PCB	FR-4,1.6MM
Screw	Iron with nickle plating
Binding post	Bronze with nickle plating
Plate	ABS
NO.	MATERIAL

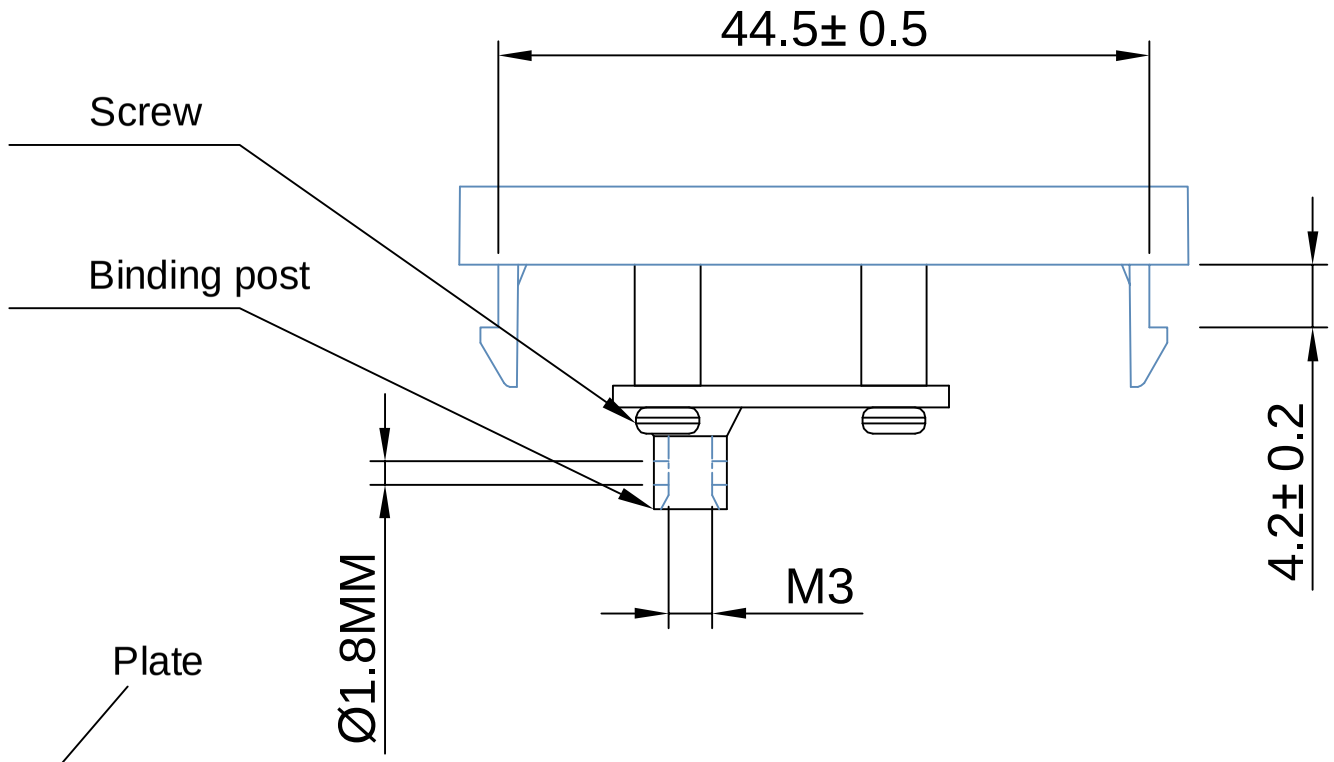

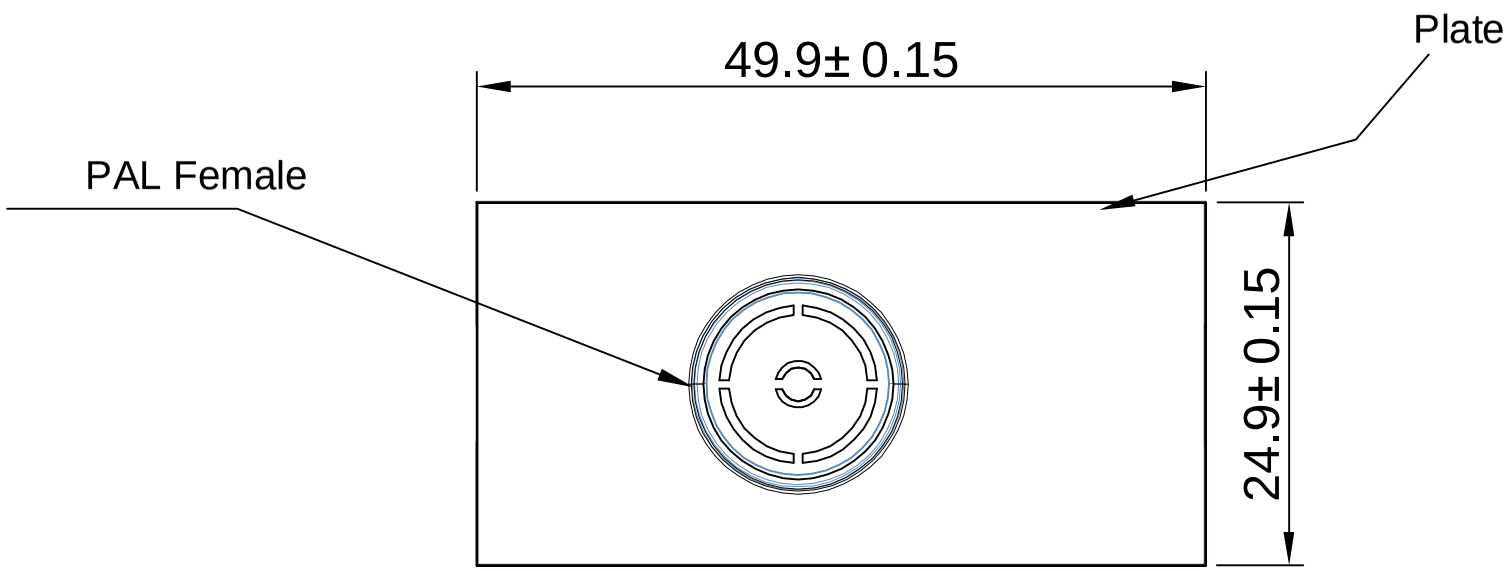

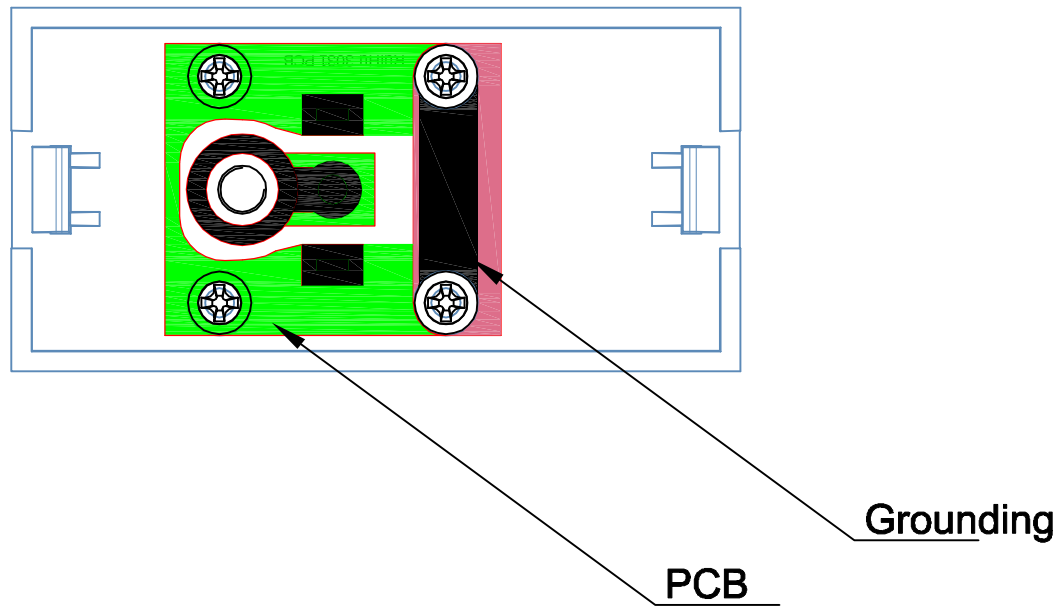

				DESCRIPTION	TV Coax Euro Module Screw Terminal Plastic 1x Coax	SCALE	FIT	UNITS: mm
				MODEL NO,	783482			
APPROVED	CHECKED	DRAWING	DESIGNED	DRAWING NO,				
				FINISHING		▲	4/22/2020	
				MATERIAL		SYM	DATE	